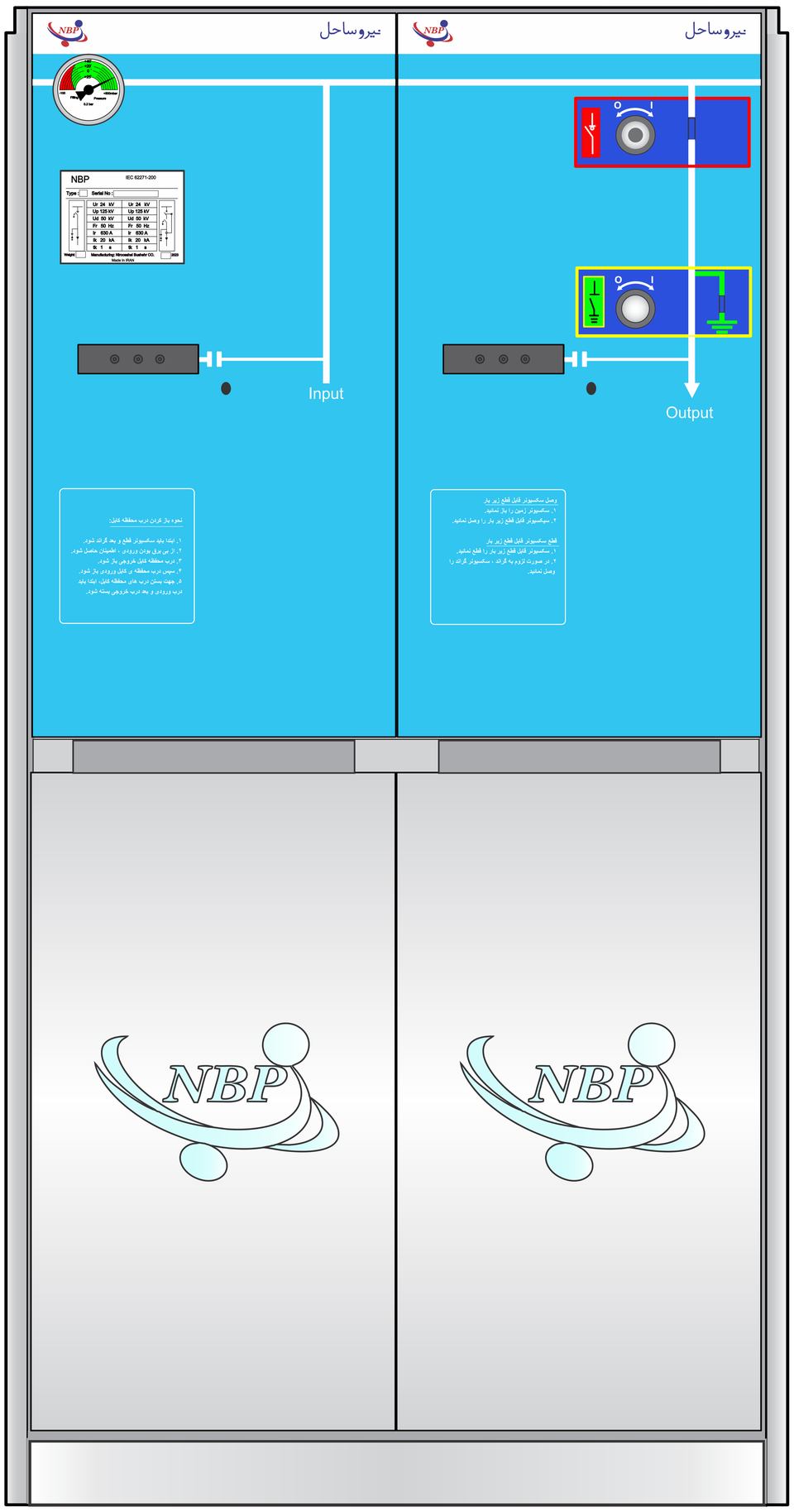

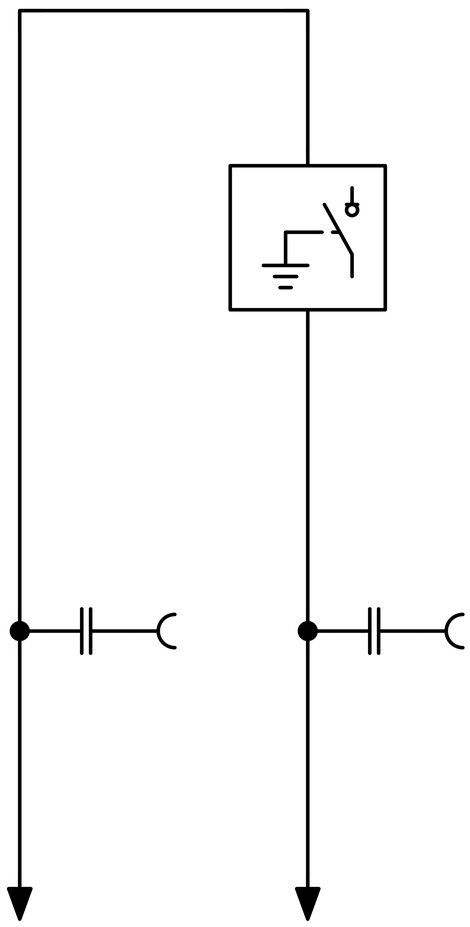

Height: 1335 mm

Depth: 754 mm

Width: 700 mm

Weight: 225 Kg

DL Module