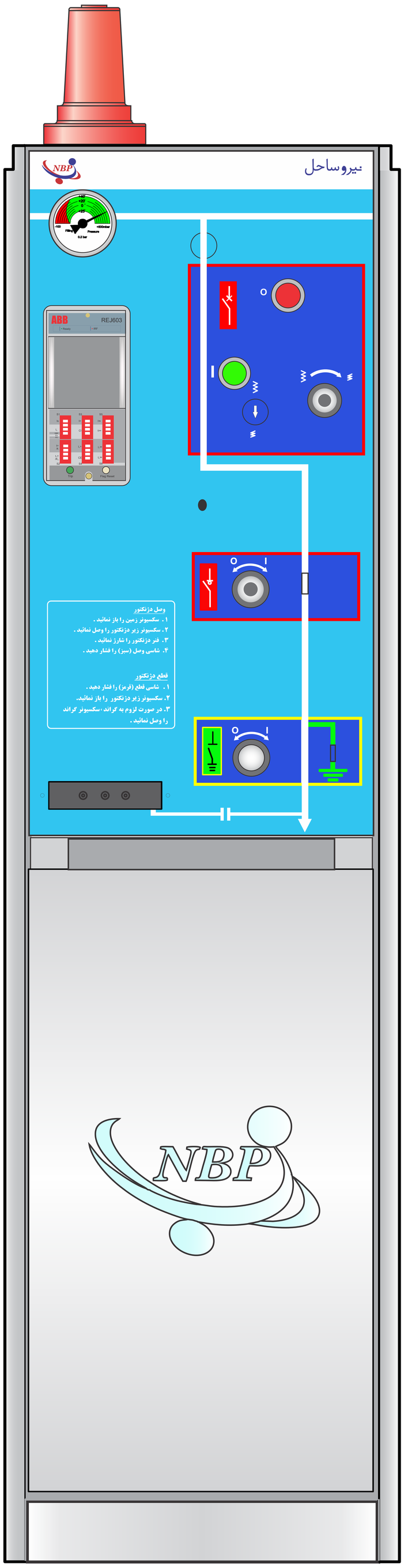

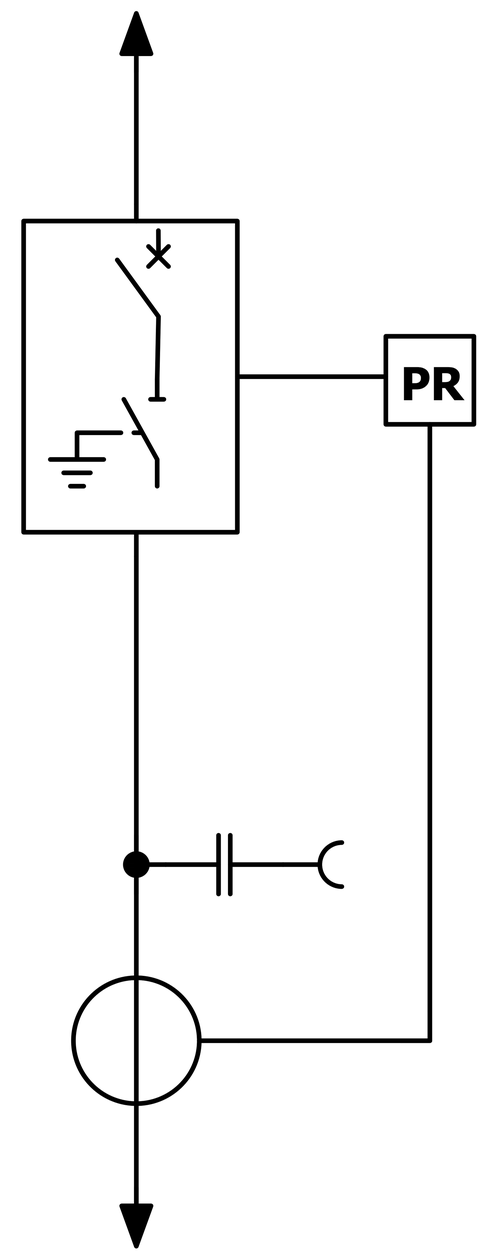

Height: 1465 mm

Depth: 754 mm

Width: 370 mm

Weight: 198 Kg

V/T.L Module