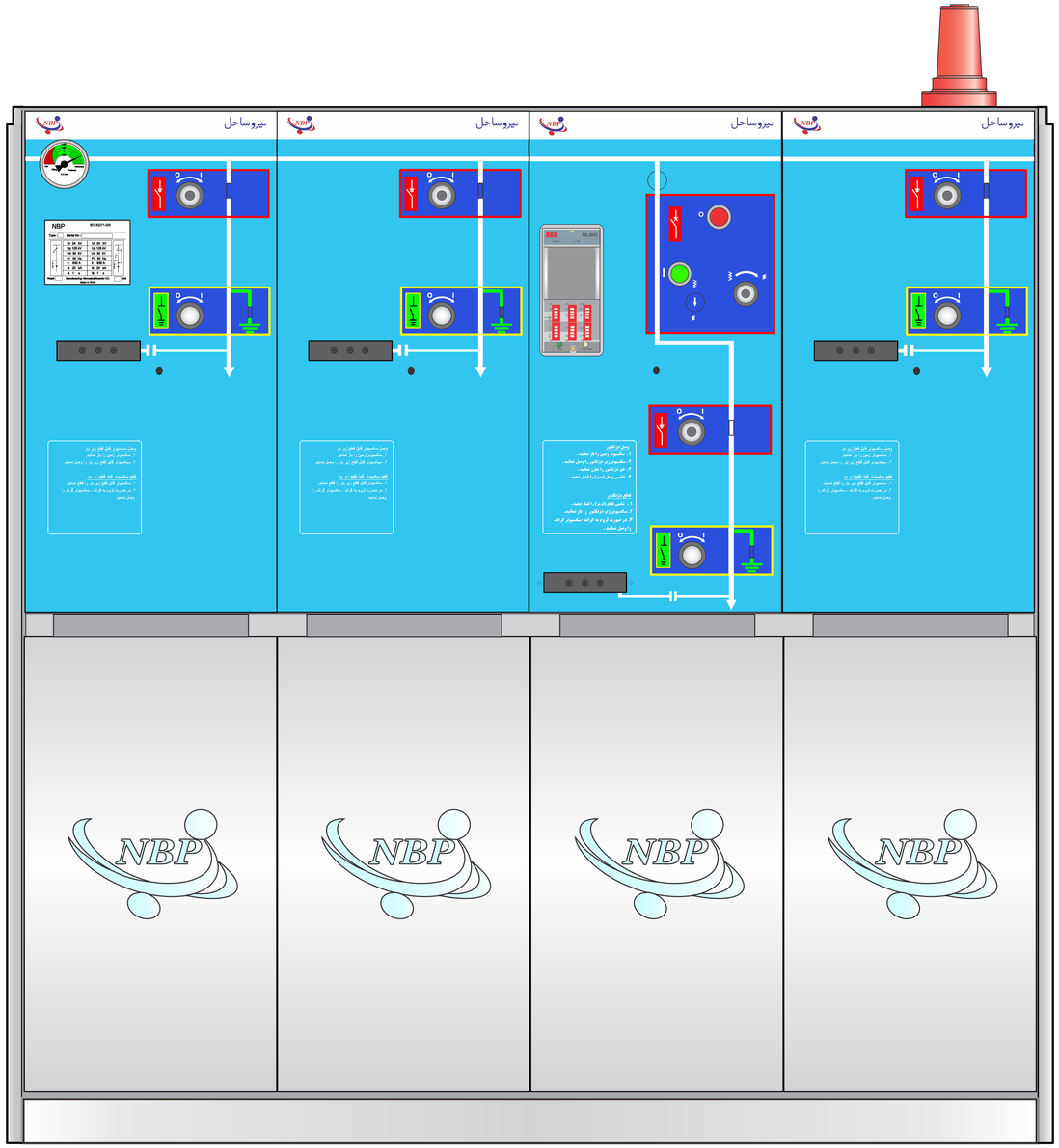

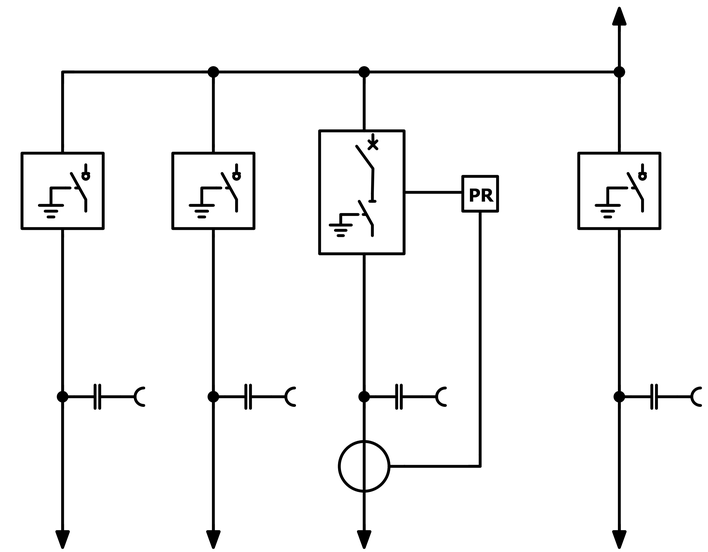

Height: 1465 mm

Depth: 754 mm

Width: 1350 mm

Weight: 457 Kg

LLVL/T.R Module