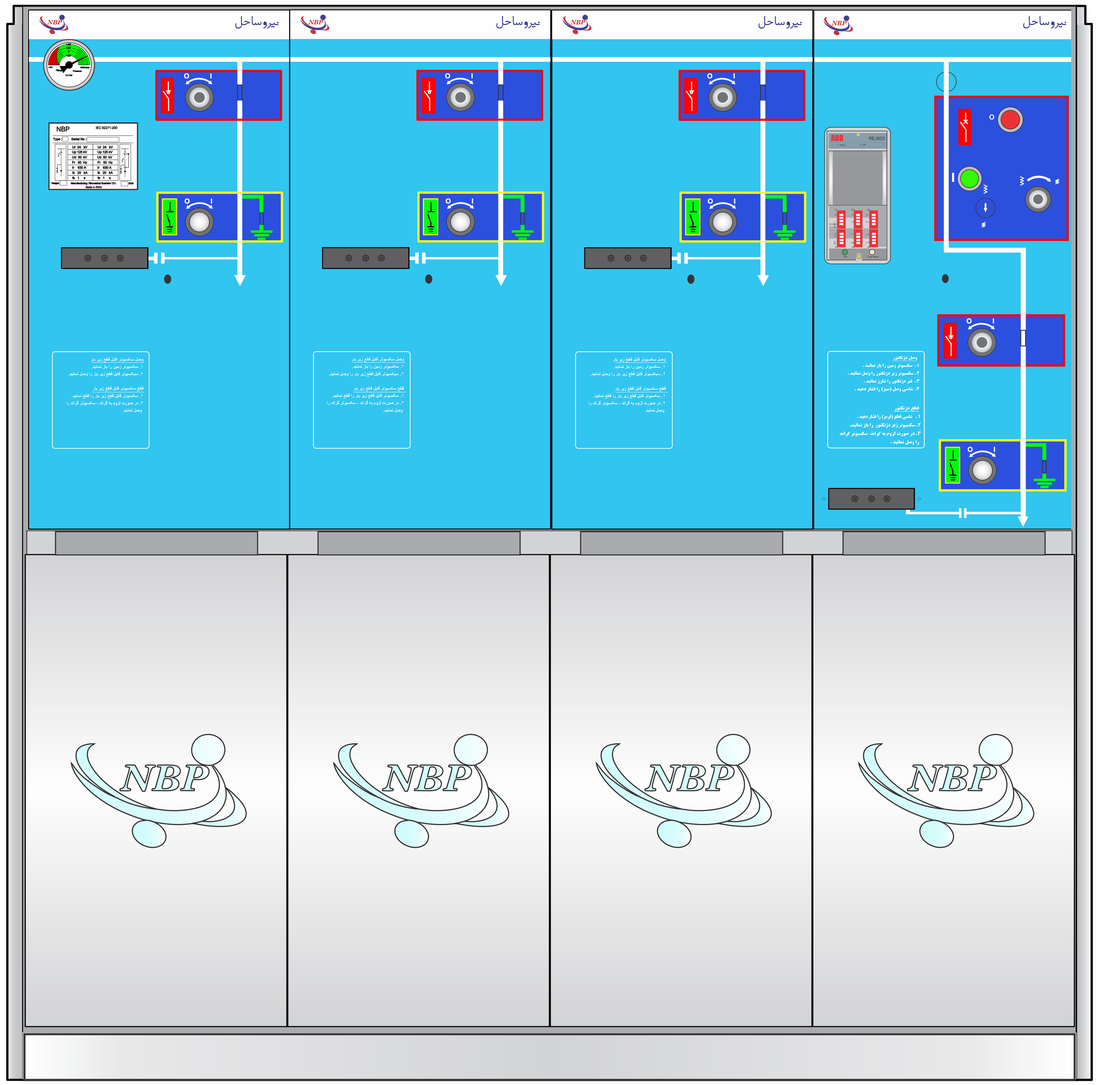

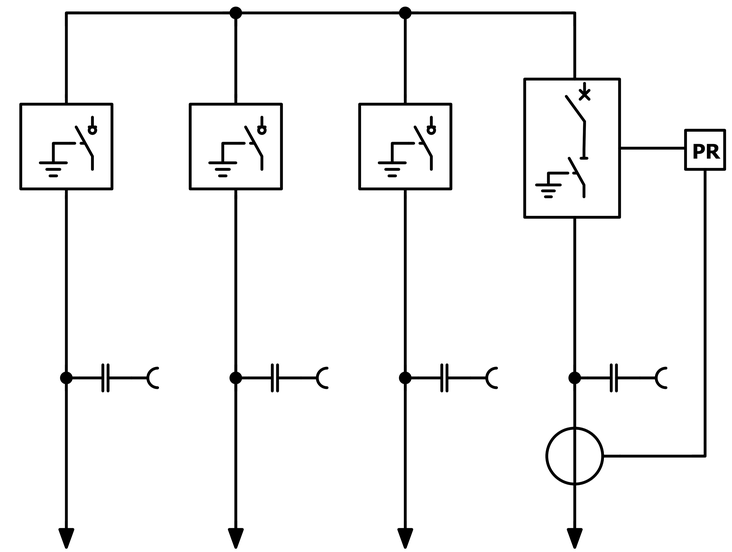

Height: 1335 mm

Depth: 754 mm

Width: 1350 mm

Weight: 450 Kg

LLLV Module