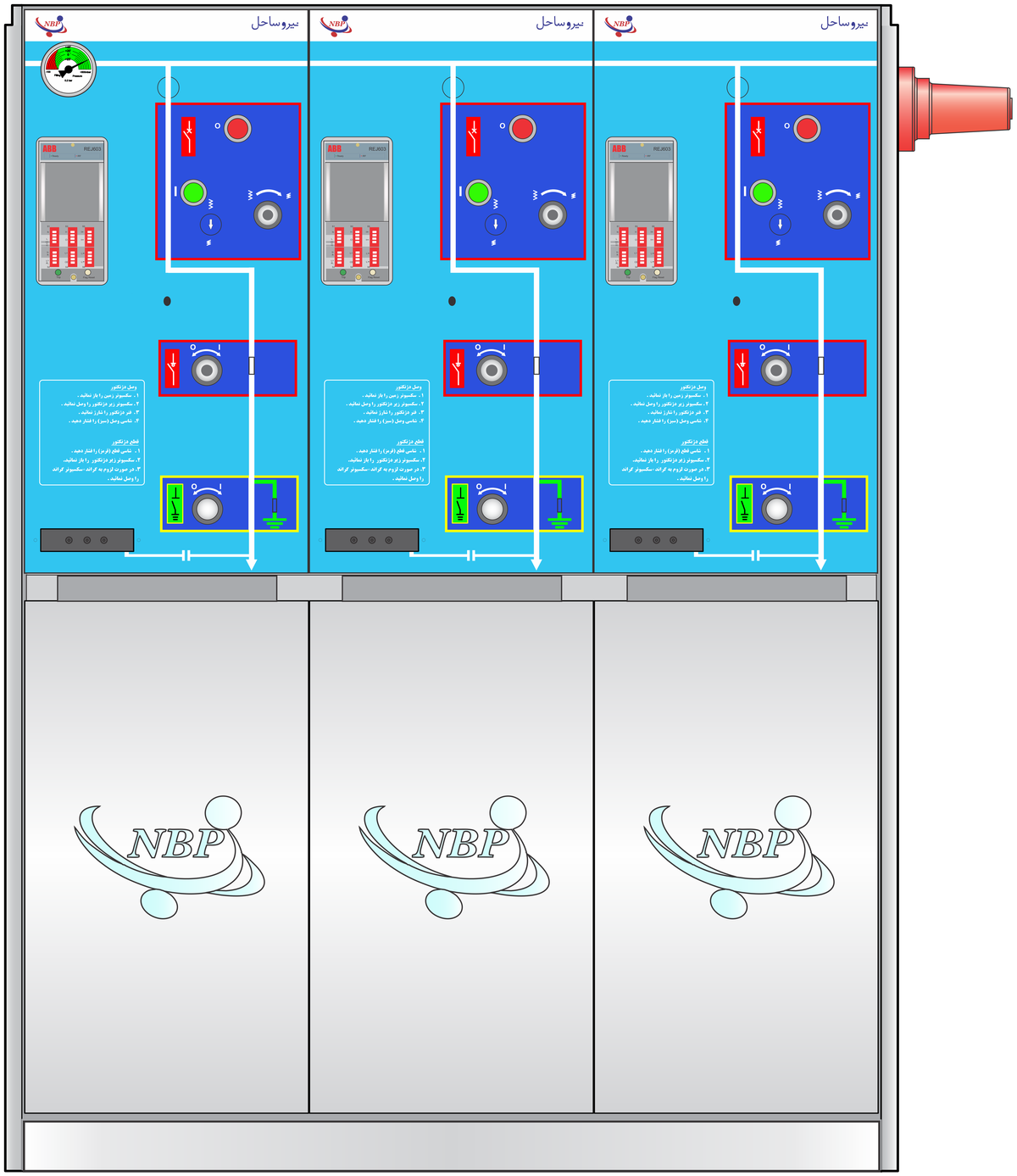

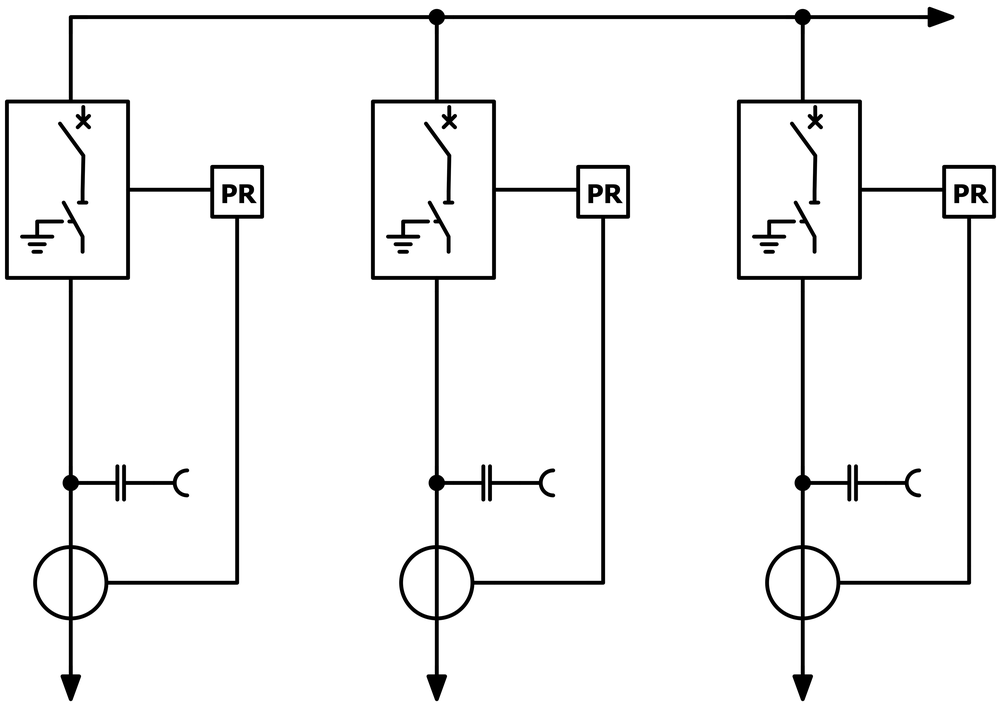

Height: 1335 mm

Depth: 754 mm

Width: 1155 mm

Weight: 412 Kg

VVV/E.R Module