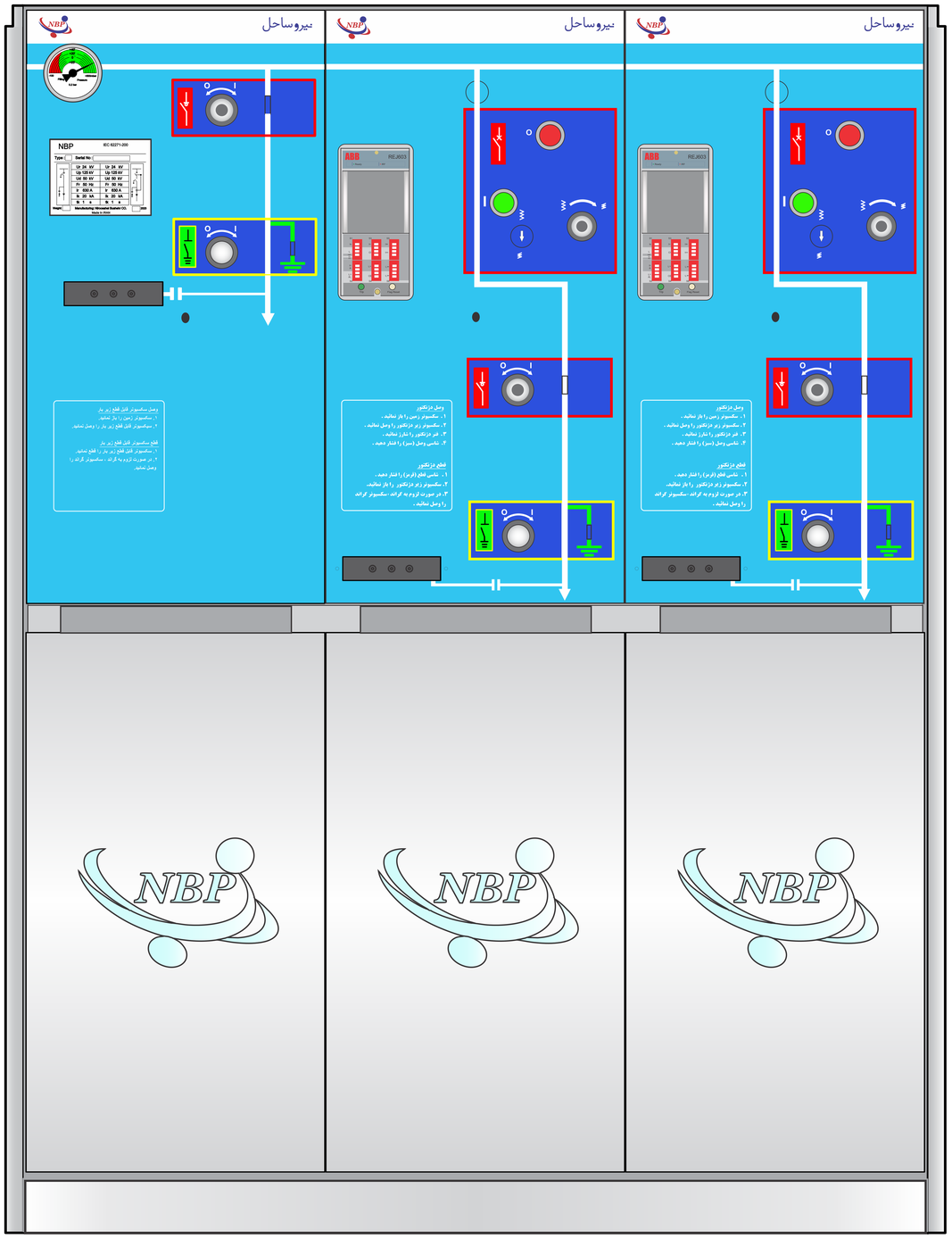

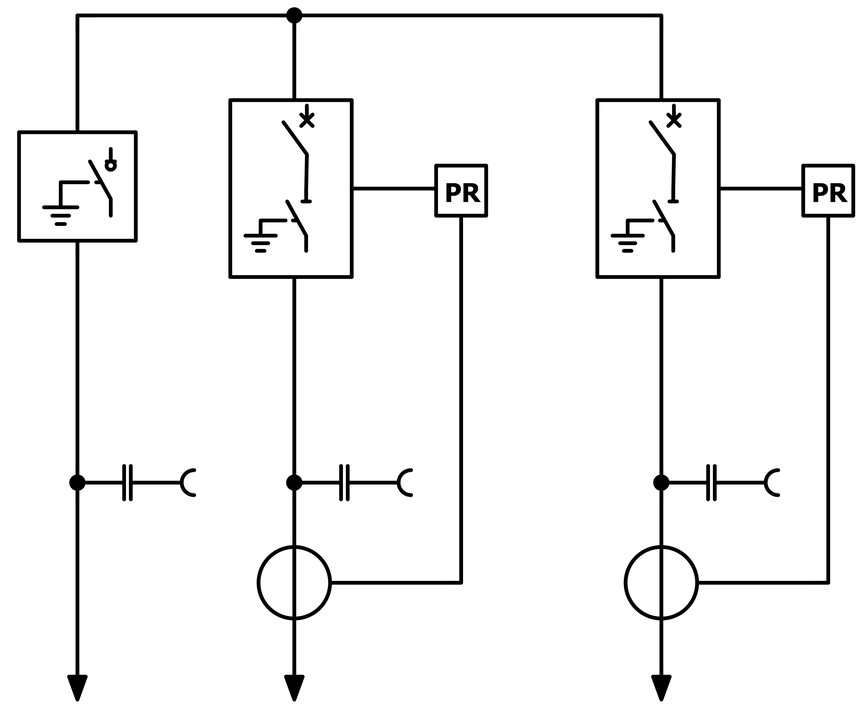

Height: 1335 mm

Depth: 754 mm

Width: 1025 mm

Weight: 375 Kg

LVV Module