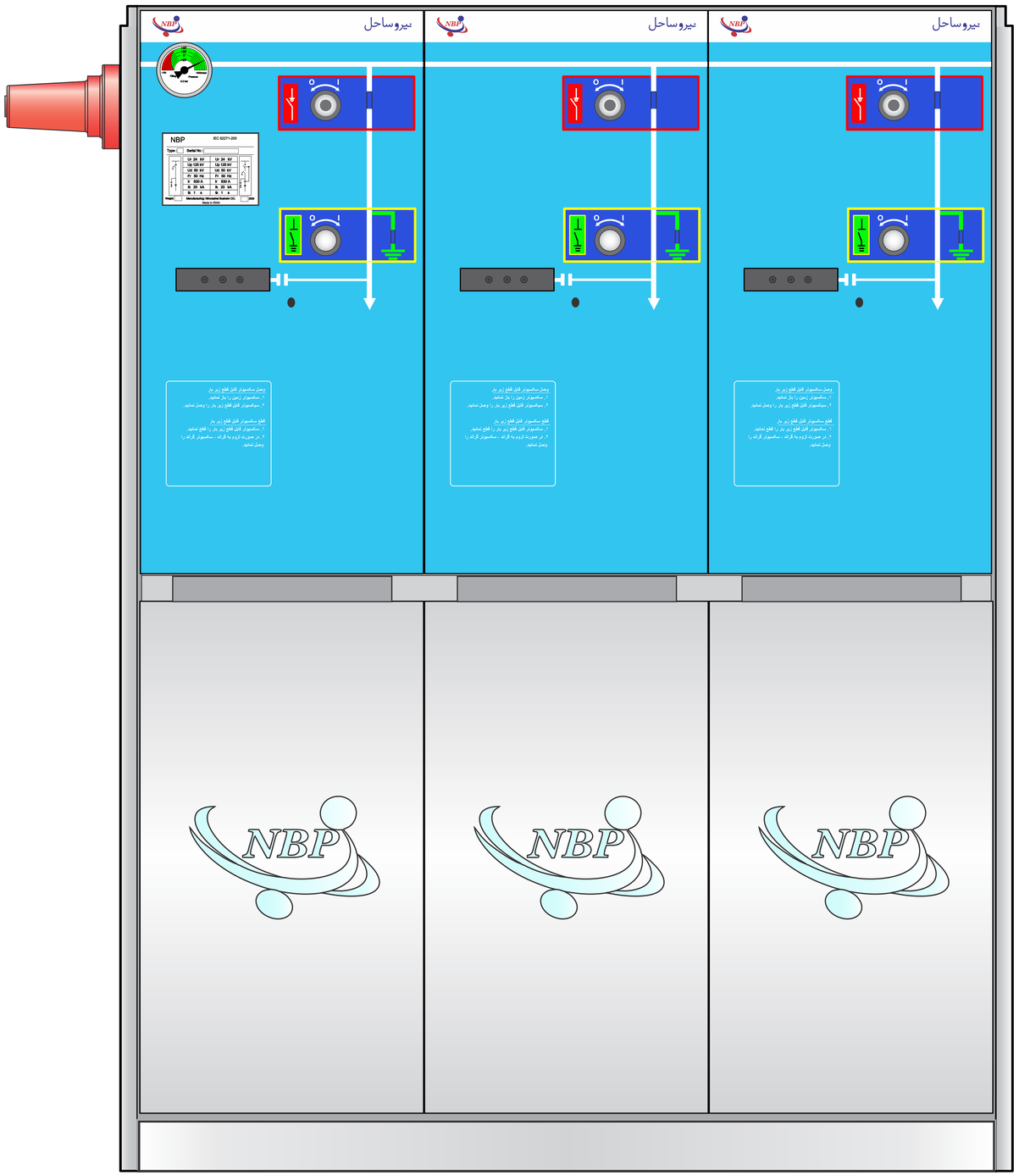

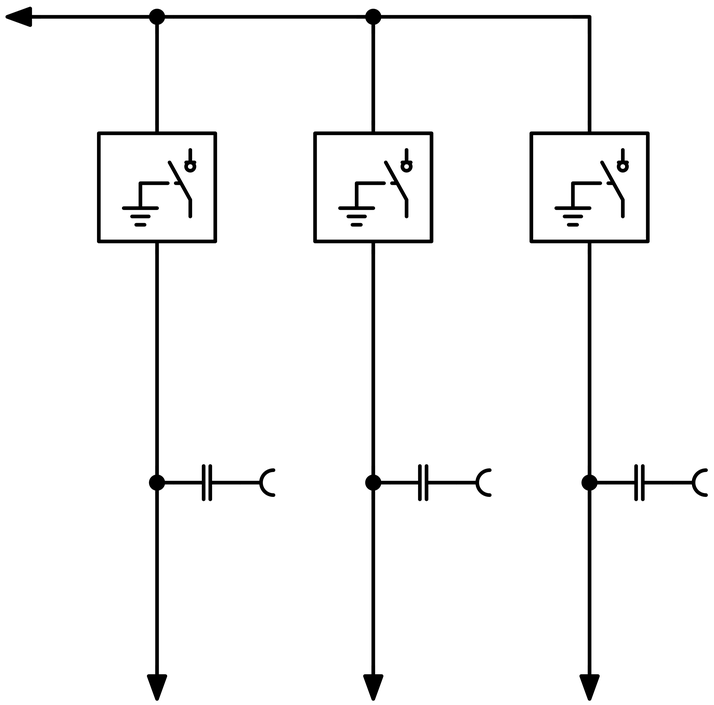

Height: 1335 mm

Depth: 754 mm

Width: 1155 mm

Weight: 322 Kg

LLL/E.L Module