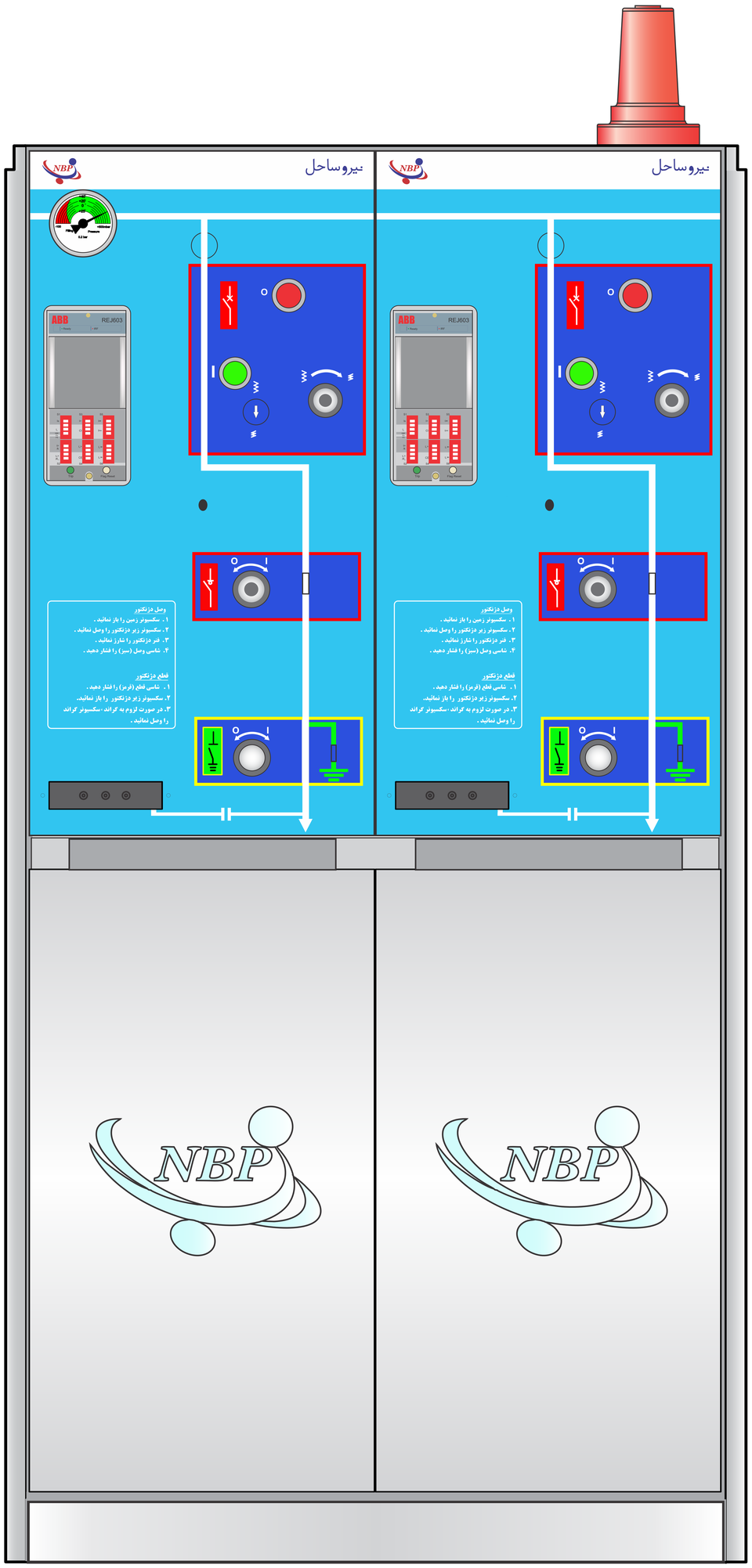

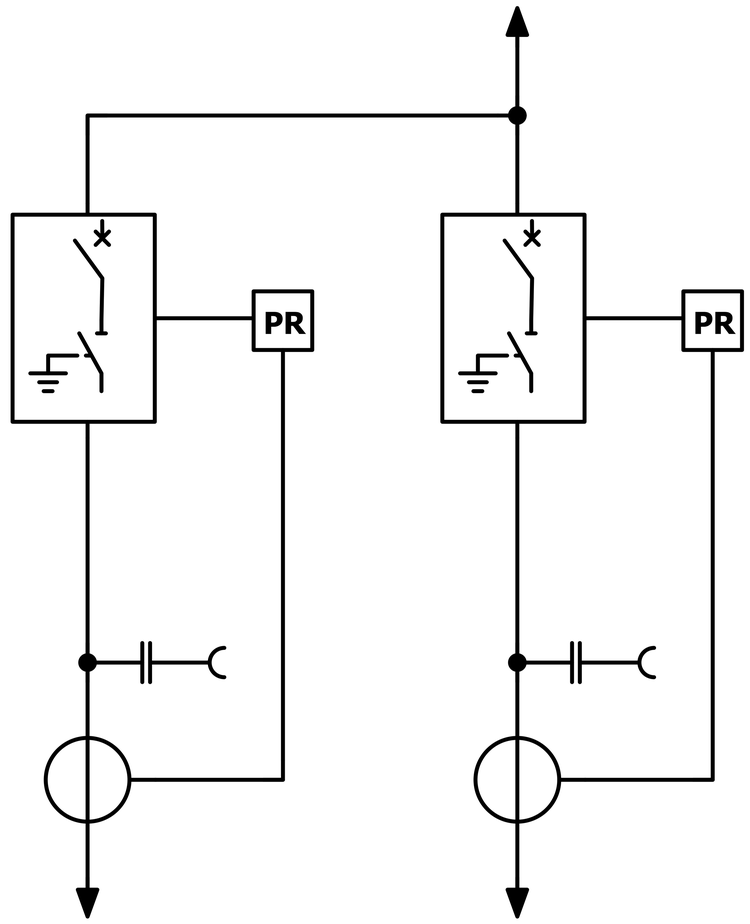

Height: 1465 mm

Depth: 754 mm

Width: 700 mm

Weight: 316 Kg

VV/T.R Module