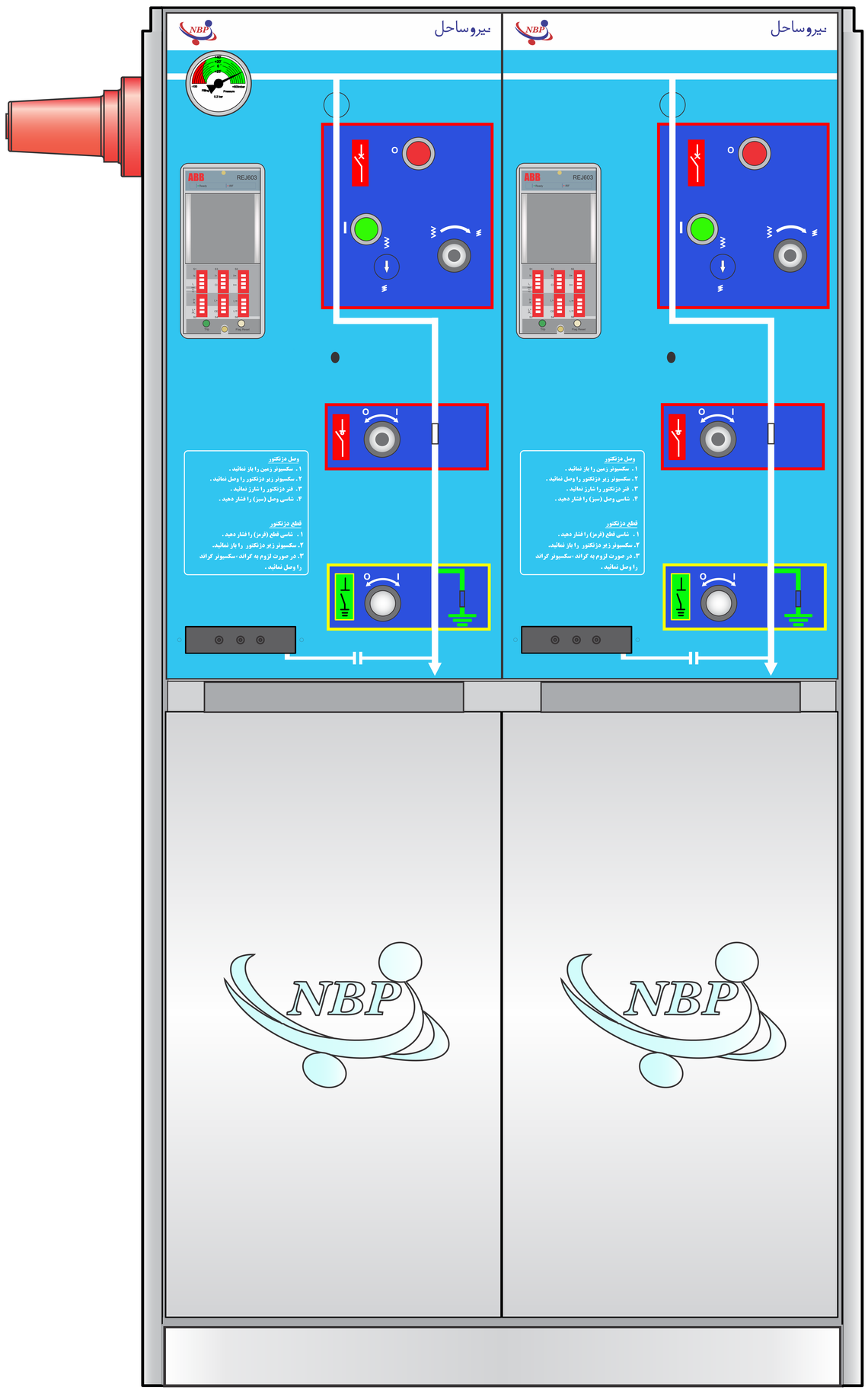


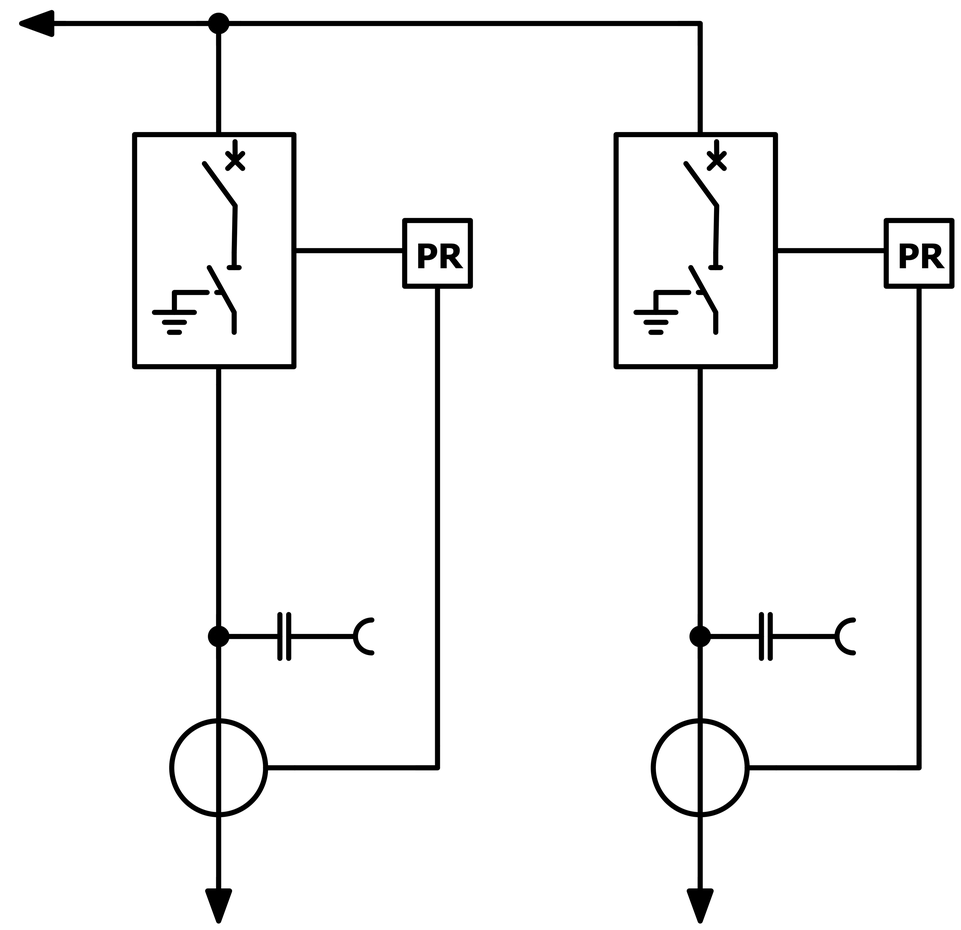


Height: 1335 mm

Depth: 754 mm

Width: 830 mm

Weight: 316 Kg

# VV/E.L Module