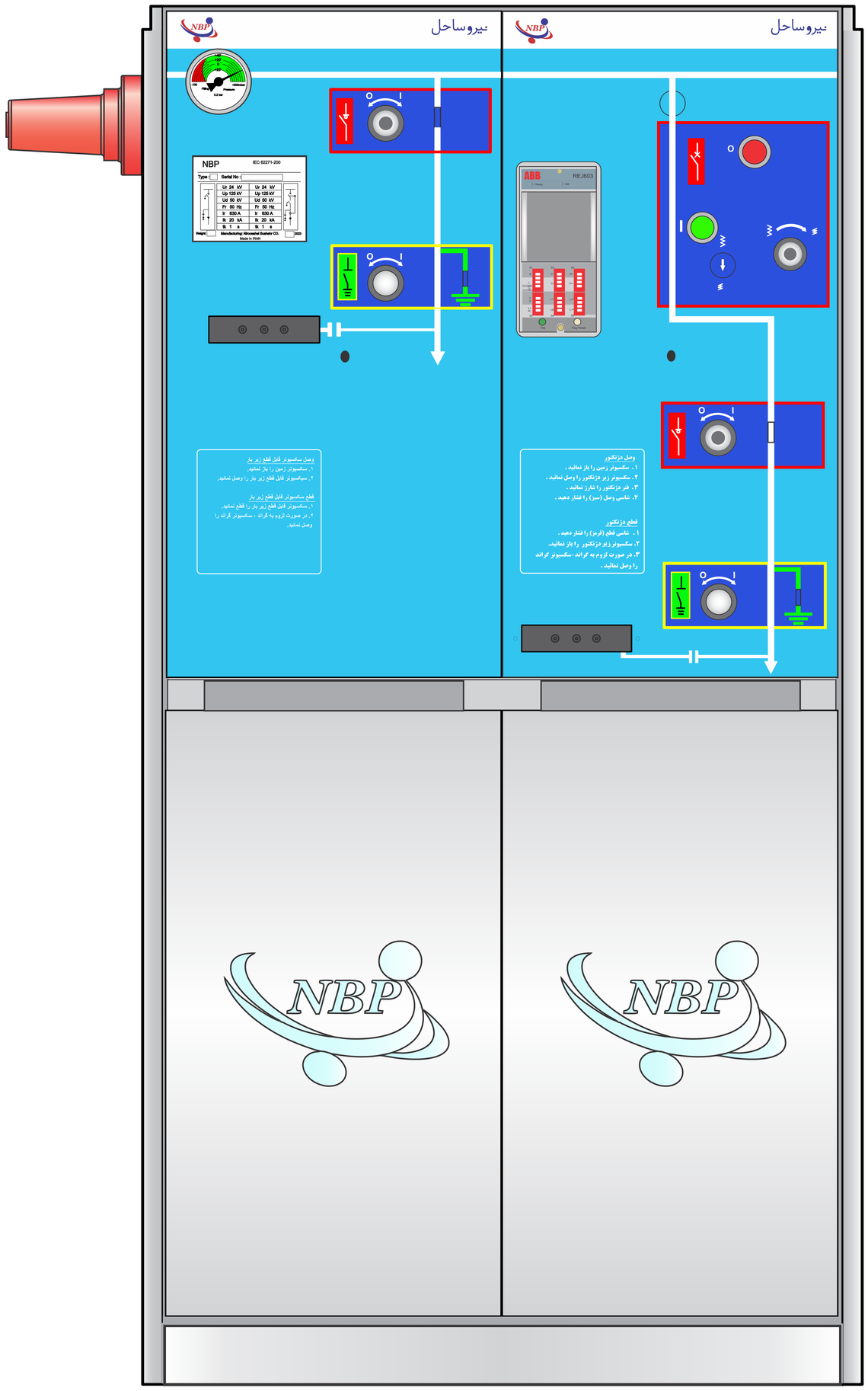

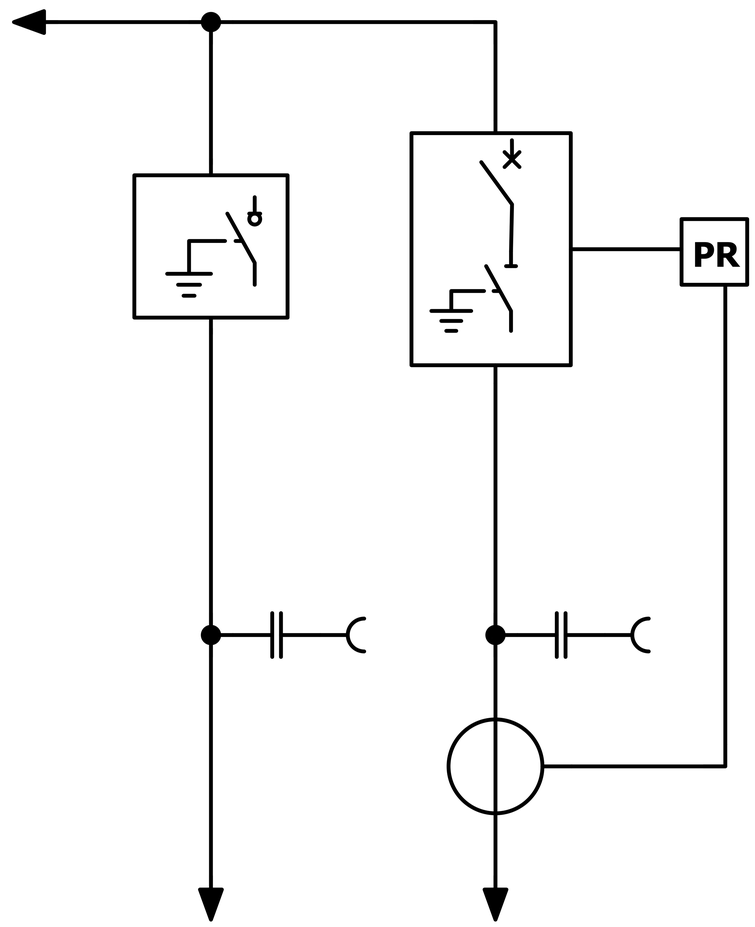

Height: 1335 mm

Depth: 754 mm

Width: 830 mm

Weight: 286 Kg

LV/E.L Module