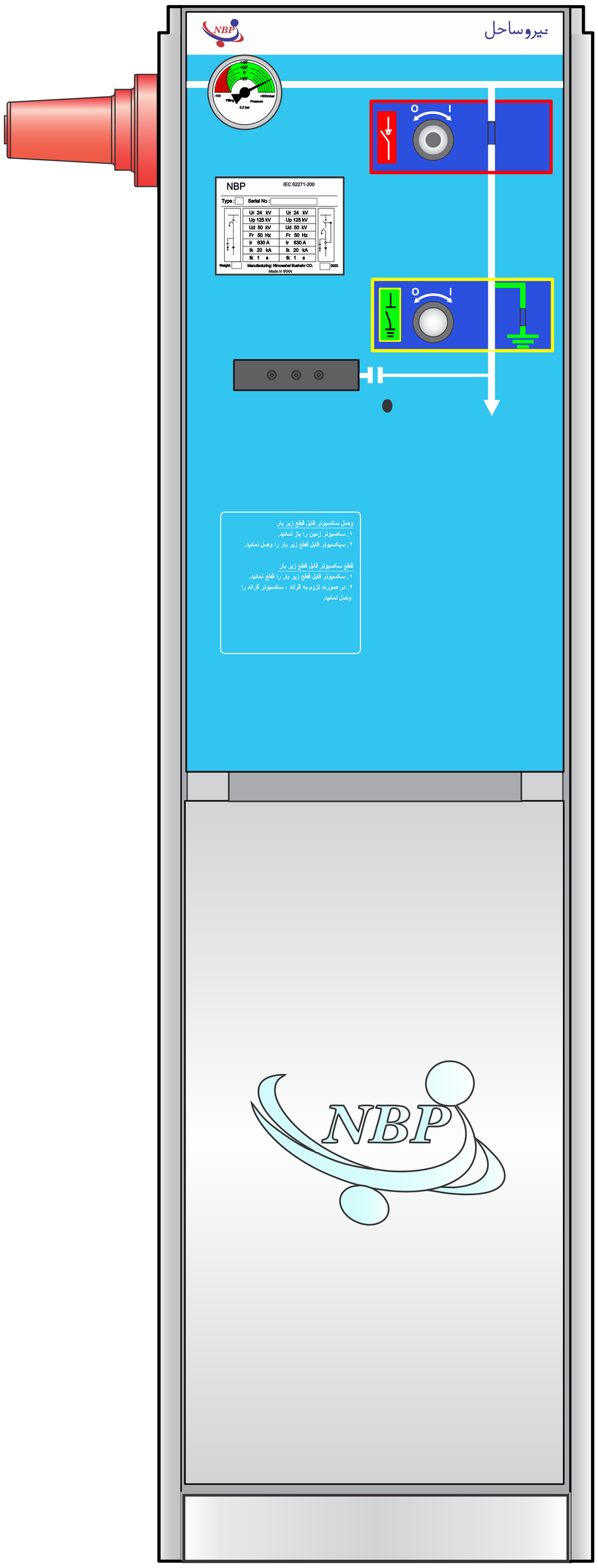

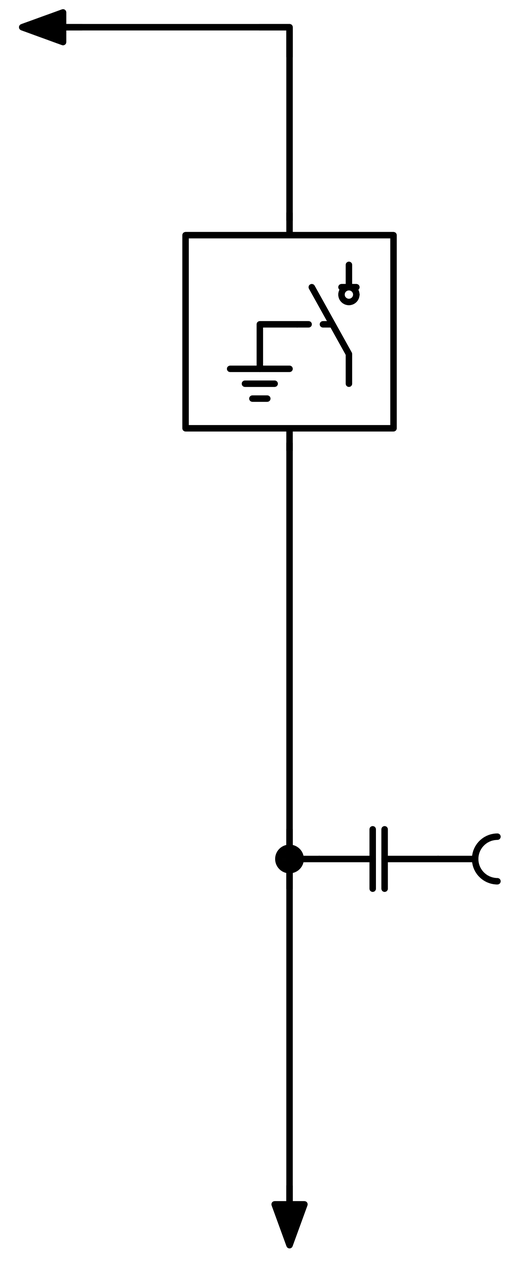

Height: 1335 mm

Depth: 754 mm

Width: 500 mm

Weight: 168 Kg

L/E.L Module